SEATING LAYOUT

PI00121922A

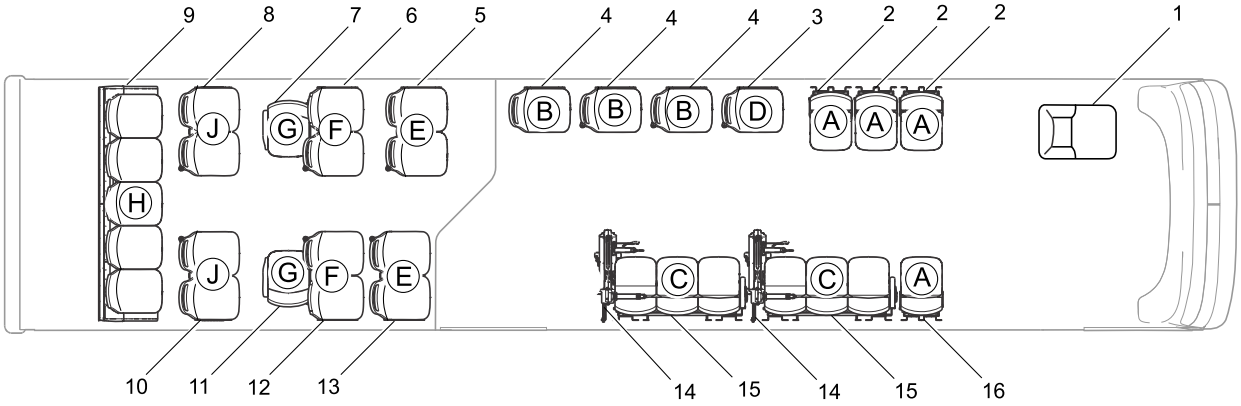

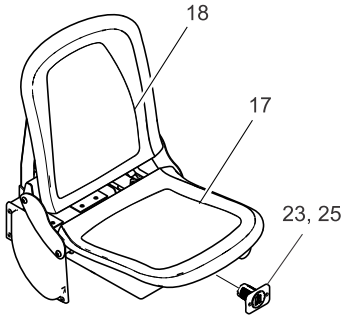

DETAIL A
TYPICAL

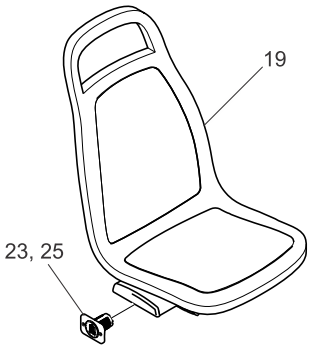

DETAIL B
TYPICAL

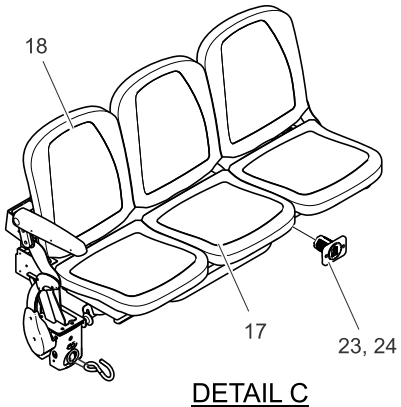

DETAIL C
TYPICAL

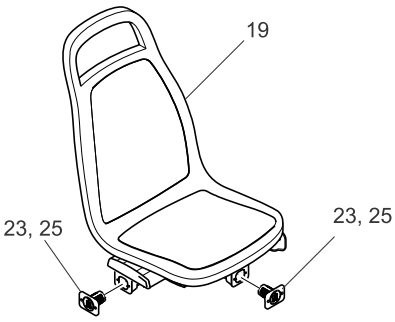

DETAIL D

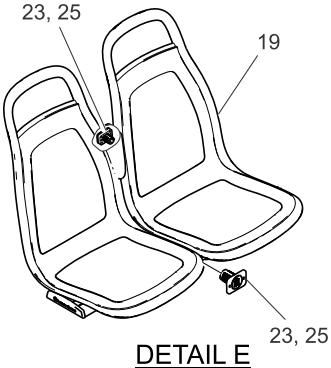

DETAIL E
TYPICAL

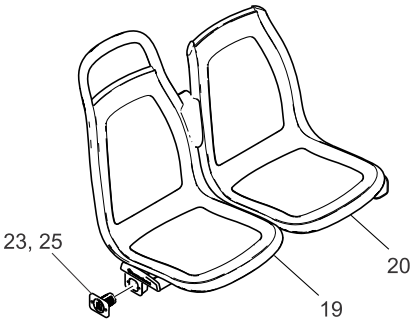

DETAIL F
TYPICAL

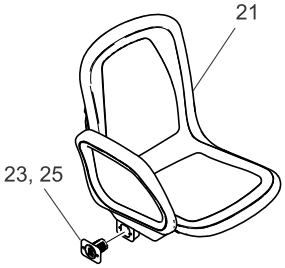

DETAIL G
TYPICAL

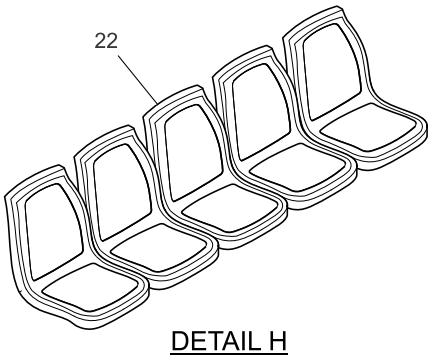

DETAIL H

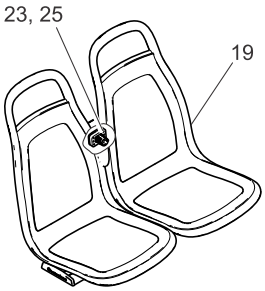

DETAIL J
TYPICAL

The New Flyer vehicles described in this manual may be protected by one or more patents and design applications or registrations in the United States and Canada, and in other countries. Refer to “Vehicle Patent Information” in this manual.
Copyright © 2025 New Flyer Industries Canada ULC

ITEM	QTY	PART NUMBER	DESCRIPTION
1	**1**	**967537**	**Driver's Seat Assembly**
2	3	1043574	Seat Assembly, 1 Passenger Longitudinal Flip-Up with USB Charger
3	1	1043573	Seat Assembly, 1 Passenger Transverse with USB Chargers
4	3	1043572	Seat Assembly, 1 Passenger Transverse with USB Charger
5	1	1043461	Seat Assembly, 2 Passenger Transverse with USB Chargers
6	1	1043457	Seat Assembly, 2 Passenger Transverse with USB Charger
7	1	1043454	Seat Assembly, 1 Passenger Longitudinal with USB Charger
8	1	1043453	Seat Assembly, 2 Passenger Transverse with USB Charger
9	1	634700	Seat Assembly, 5 Passenger Rear Cross
10	1	1043447	Seat Assembly, 2 Passenger Transverse with USB Charger
11	1	1043446	Seat Assembly, 1 Passenger Longitudinal with USB Charger
12	1	1043442	Seat Assembly, 2 Passenger Transverse with USB Charger
13	1	1043441	Seat Assembly, 2 Passenger Transverse with USB Chargers
14	**2**	**969249**	**Wheelchair Barrier Assembly, Curbside**
15	2	1043571	Seat Assembly, 3 Passenger Longitudinal Flip-Up with USB Charger
16	1	1043570	Seat Assembly, 1 Passenger Longitudinal Flip-Up with USB Charger
17	10	6499298	Insert Cushion, Flip-Up 980 Gray Plastic with 989 Blue Insert
18	10	6477979	Insert Back, Flip-Up 980 Gray Plastic with 989 Blue Insert
19	14	6499299	Seat Module, 980 Grey with 201C Red Crimson Insert
20	2	6499300	Seat Module, 980 Grey with 201C Red Crimson Insert
21	2	6499301	Seat Module, 980 Grey with 201C Red Crimson Insert
22	5	6499302	Seat Module, 980 Grey with 201C Red Crimson Insert
23	21	6493743	Charger, USB A & C
24	2	6493949	Harness, USB
25	19	6495791	Harness, USB
			NOTE: These parts may have a specific color or material code that is required to be included when ordering. Please check to see if those part numbers are listed in the Color/Material Code Index before ordering.

The New Flyer vehicles described in this manual may be protected by one or more patents and design applications or registrations in the United States and Canada, and in other countries. Refer to "Vehicle Patent Information" in this manual.
Copyright © 2025 New Flyer Industries Canada ULC